Power Board

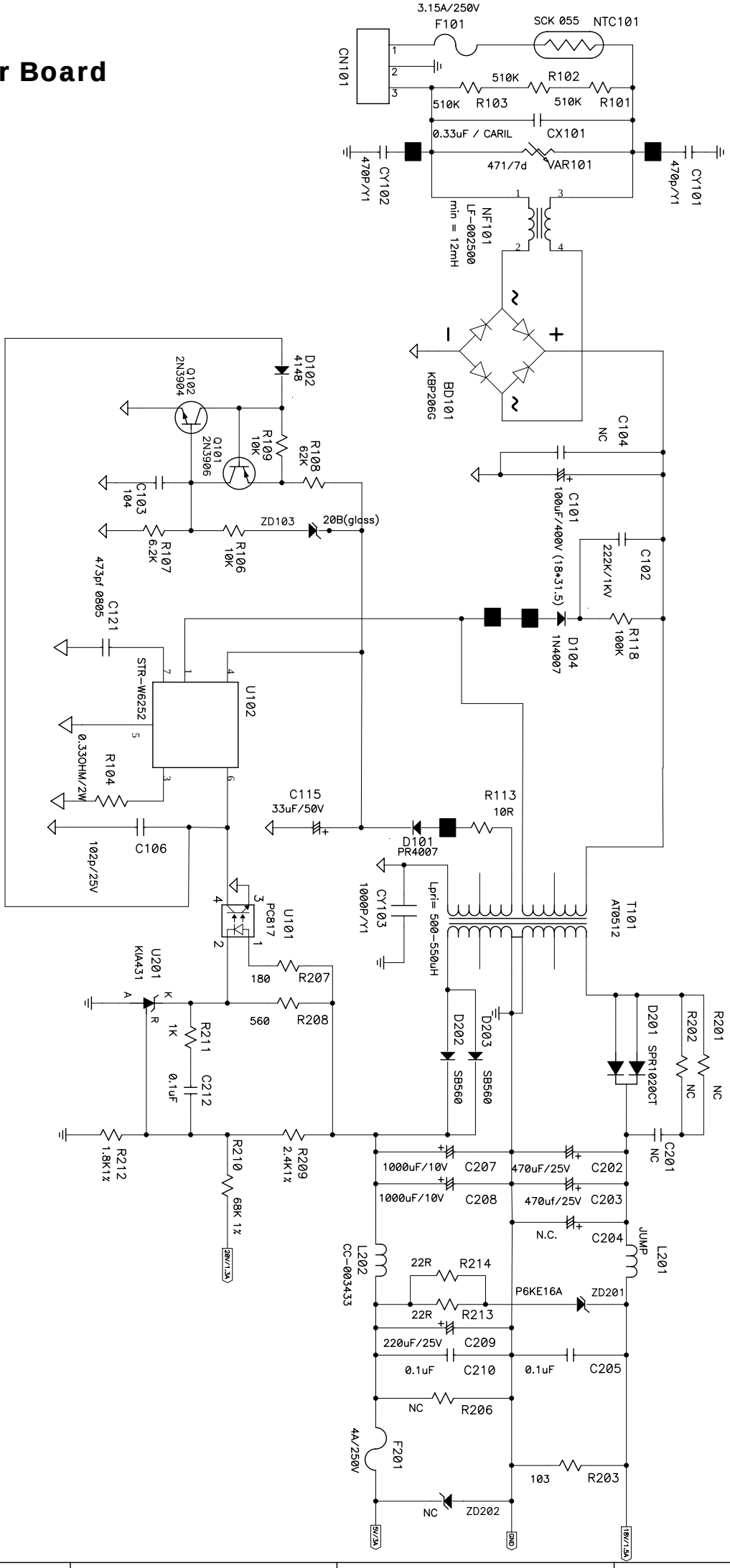
CN101
F101
3.15A/250V
SCK 055
NTC101
R102
510K
R103
510K
R101
510K
CX101
0.33uF / CARIL
VAR101
471/7d
CY102
470P/Y1
CY101
470p/Y1
NF101
LF-002500
min = 12mH
BD101
KBP206G
C104
NC
C101
100uF/400V (18*31.5)
C102
222K/1KV
R118
100K
D104
1N4007
D102
4148
Q102
2N3904
Q101
2N3906
R109
10K
R108
62K
C103
104
R107
6.2K
R106
10K
ZD103
20B(glass)
C121
473pf 0805
STR-W6252
U102
R104
0.33OHM/2W
C106
102p/25V
C115
33uF/50V
R113
10R
D101
PR4007
CY103
1000P/Y1
Lpri= 500-550uH
T101
AT0512
U101
PC817
R207
180
U201
KIA431
R208
560
R211
1K
C212
0.1uF
R212
1.8K1%
R210
68K 1%
R209
2.4K1%
D202
SB560
D203
SB560
D201
SPR1020CT
R202
NC
R201
NC
C201
NC
1000uF/10V
C207
470uF/25V
C202
1000uF/10V
C208
470uf/25V
C203
N.C.
C204
JUMP
L201
L202
CC-003433
22R
R214
22R
R213
P6KE16A
ZD201
220uF/25V
C209
0.1uF
C210
0.1uF
C205
NC
R206
F201
4A/250V
103
R203
NC
ZD202
5V/3A
GND
18V/1.5A

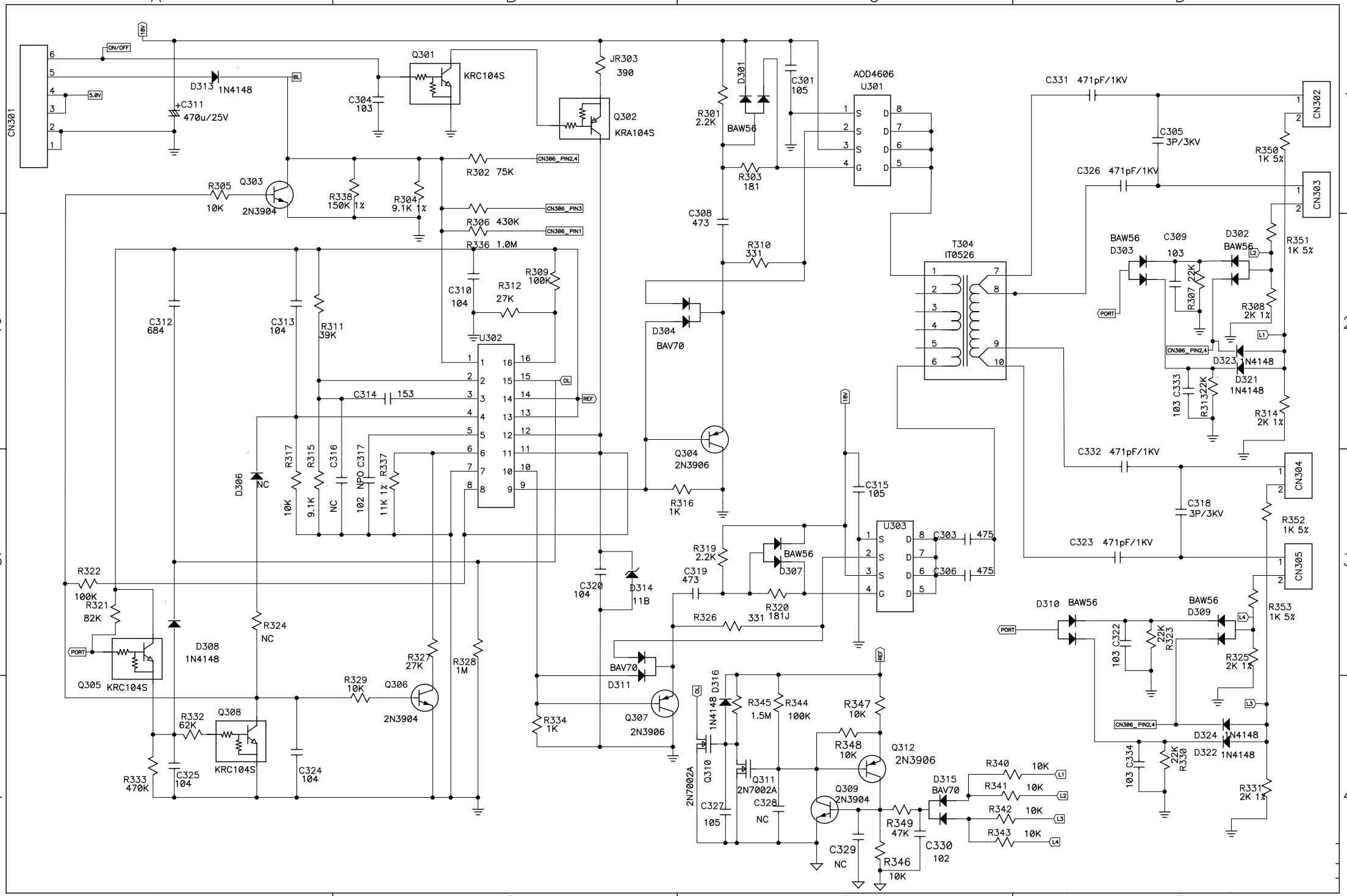
CN301
ON/OFF
18V
5.0V
D313 1N4148
+C311 470u/25V
BL
Q301 KRC104S
C304 103
JR303 390
Q302 KRA104S
R302 75K
CN306_PIN2,4
R305 10K
Q303 2N3904
R338 150K 1%
R304 9.1K 1%
R306 430K
CN306_PIN3
CN306_PIN1
R336 1.0M
C310 104
R312 27K
R309 100K
C312 684
C313 104
R311 39K
U302
OL
REF
C314 153
R317 10K
R315 9.1K
C316 NC
C317 102
R337 11K 1%
D306 NC
R322 100K
R321 82K
PORT
Q305 KRC104S
D308 1N4148
R324 NC
R327 27K
R328 1M
R329 10K
Q306 2N3904
R332 62K
Q308 KRC104S
R333 470K
C325 104
C324 104
R334 1K
C320 104
D314 11B
BAV70 D311
Q307 2N3906
R301 2.2K
D301
BAW56
R303 181
C308 473
R310 331
D304 BAV70
Q304 2N3906
R316 1K
C301 105
AOD4606 U301
S S S G D D D D
C315 105
U303
R319 2.2K
BAW56 D307
C319 473
R320 181J
R326 331
C303 475
C306 475
D316 1N4148
R345 1.5M
R344 100K
R347 10K
R348 10K
Q312 2N3906
Q310 2N7002A
Q311 2N7002A
C327 105
C328 NC
Q309 2N3904
C329 NC
R349 47K
C330 102
R346 10K
D315 BAV70
R340 10K
R341 10K
R342 10K
R343 10K
L1
L2
L3
L4
C331 471pF/1KV
C305 3P/3KV
C326 471pF/1KV
T304 IT0526
BAW56 D303
C309 103
D302 BAW56
R307 22K
R308 2K 1%
D323 1N4148
D321 1N4148
C333 103
R313 22K
R314 2K 1%
C332 471pF/1KV
C318 3P/3KV
C323 471pF/1KV
CN302
CN303
CN304
CN305
R350 1K 5%
R351 1K 5%
R352 1K 5%
R353 1K 5%
D310 BAW56
BAW56 D309
C322 103
R323 22K
R325 2K 1%
D324 1N4148
D322 1N4148
C334 103
R330 22K
R331 2K 1%

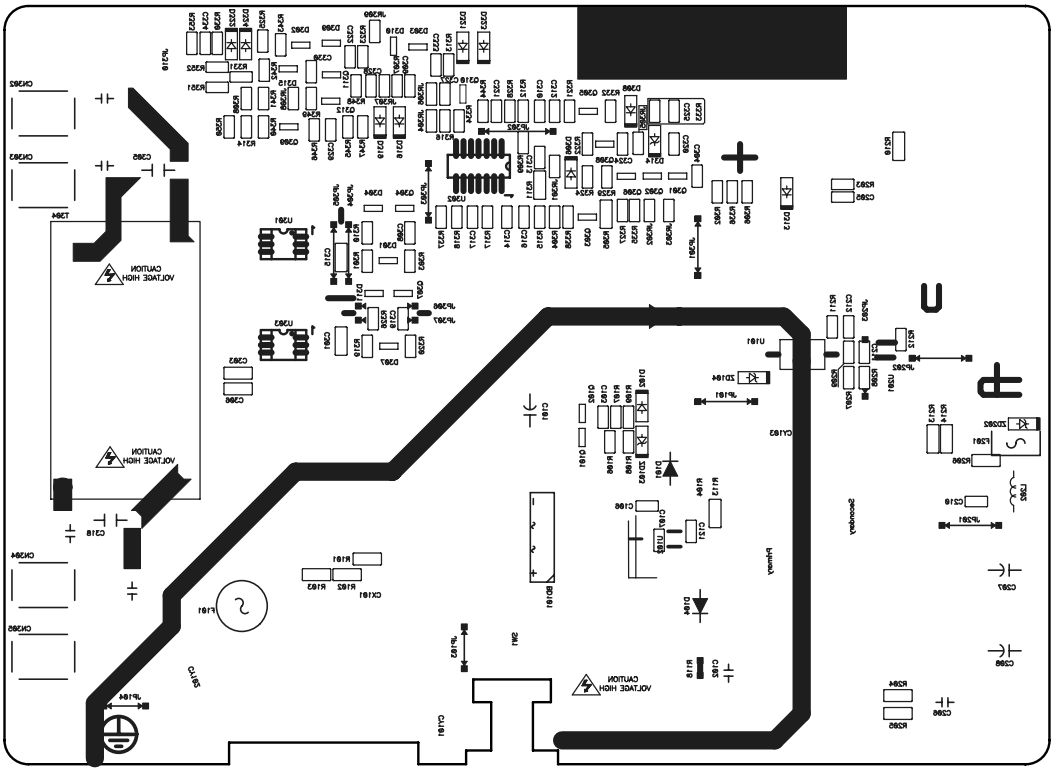

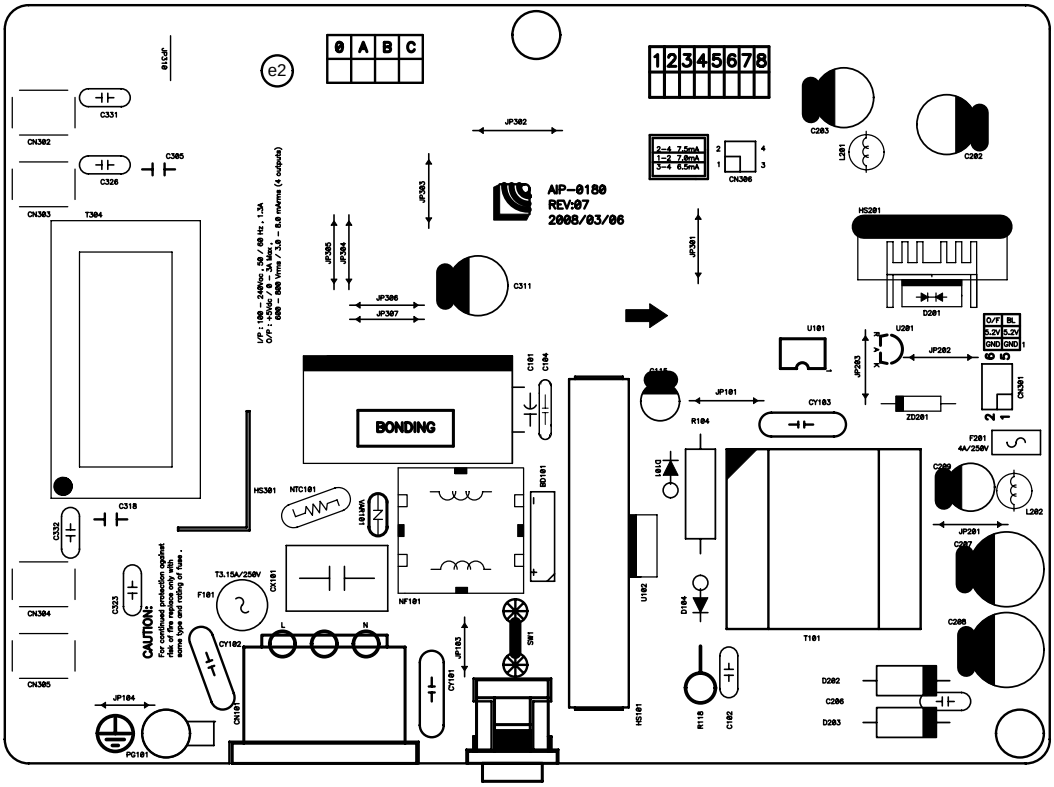
AIP-0180
REV:07
2008/03/06
BONDING
CAUTION:
For continued protection against risk of fire replace only with same type and rating of fuse.
I/P : 90 ~ 240Vac ,50 / 60 Hz , 1.3A
O/P : 5.2V ~ 7.6A , 5.2V ~ 0.6A
600 ~ 800 Vrms / 3.0 ~ 8.0 mArms (4 outputs)
2-4 7.5mA
1-2 7.0mA
3-4 6.5mA
O/P BL
5.2V 5.2V
GND GND